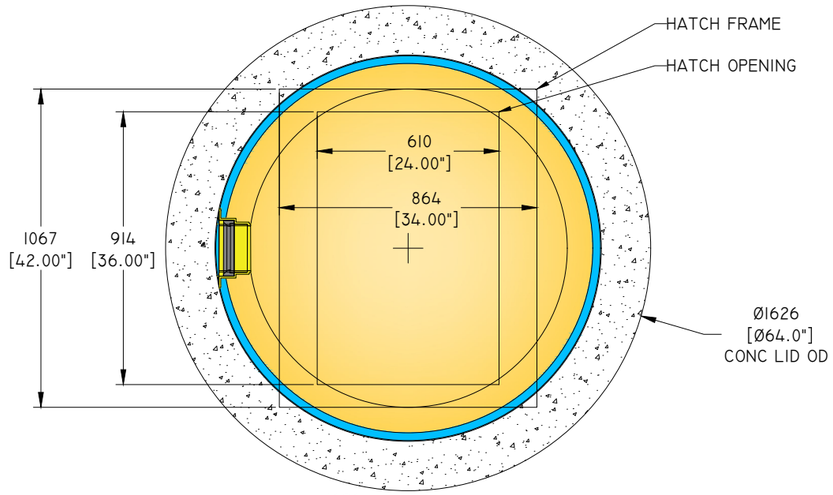

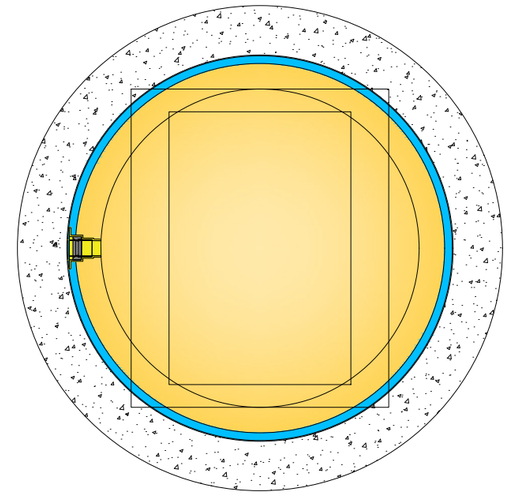

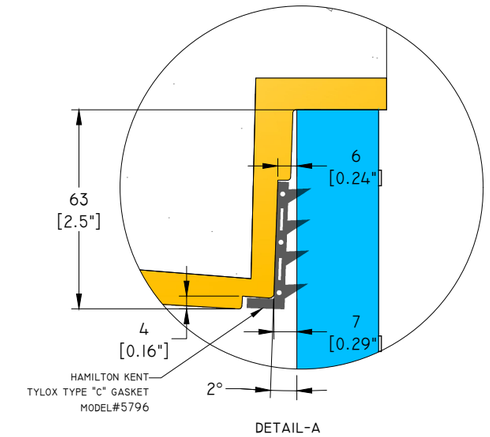

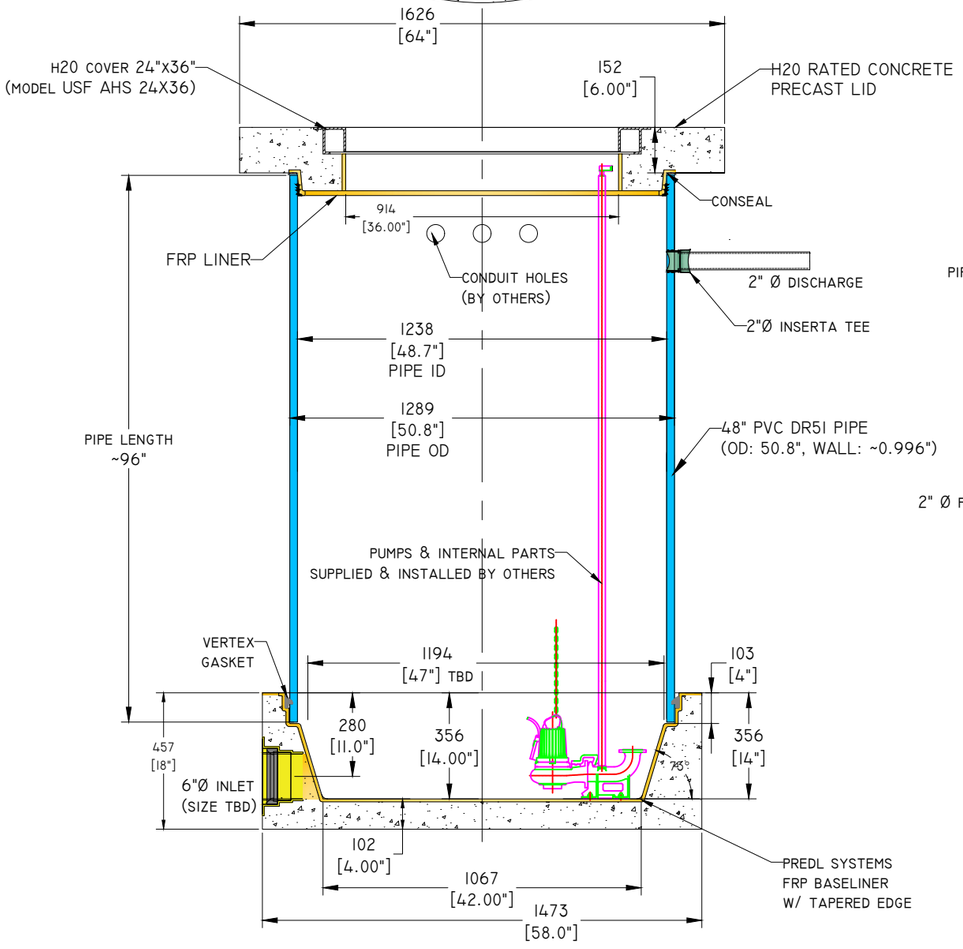

PUMP STATION
ELEVATION VIEW
SCALE: 1:20

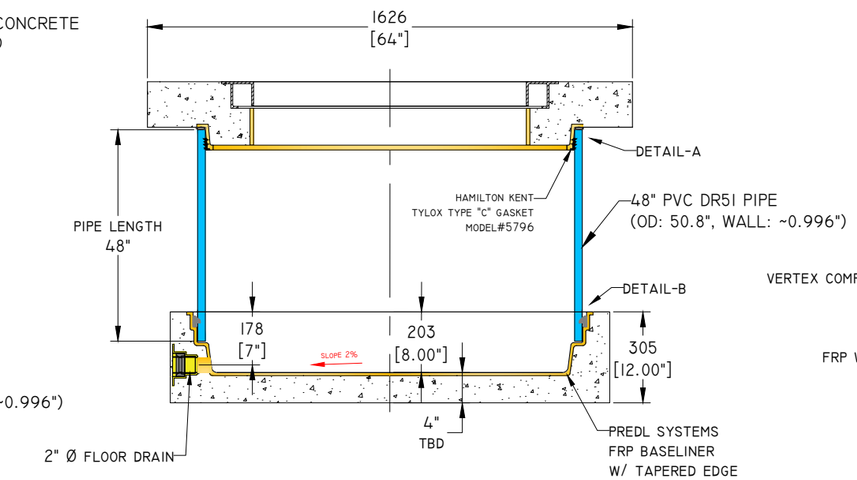

VALVE STATION
ELEVATION VIEW
SCALE: 1:20

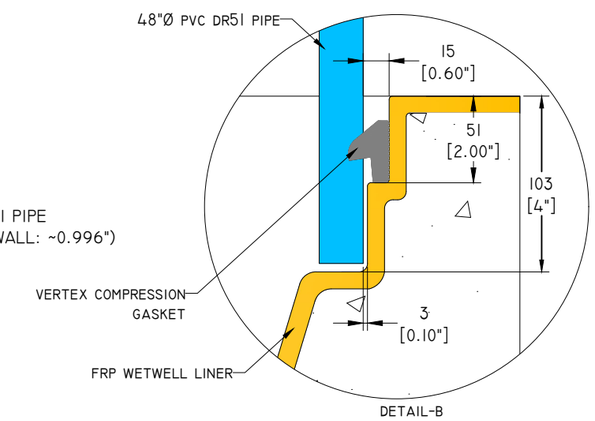

Fiberglass Reinforced Polymer (FRP)

Typical Physical Properties

(For components)	Testing Method	Comp.A	Comp.B
Viscosity, cps	Brookfield L.V.F. Spindle #2 @ 30 RPM	200	400 - 600
Specific gravity	ASTM D-1638	1.20	1.15
Weight per gal. Lbs.		10.00	9.58
Colour	Visual	Dark Brown	Light Brown
Styrene monomer content	ASTM D-1638	20 % in system	
		1.20	1.15
Mix ratio	By weight	31	69

(For cured material)	Testing Method	Results (0% glass)
Tensile strength, psi	ASTM D-638	13,000
Tensile modulus, psi	ASTM D-638	450,000
Flexural strength, psi	ASTM D-790	28,000
Flexural modulus, psi	ASTM D-790	400,000
Heat distortion temp.	ASTM D-648	160° F
Elongation, %	ASTM D-638	4
Barcol hardness		42
Shore D hardness		85
Linear shrinkage, %	ASTM D-2566-88	85

Reactivity data (100 gram mass @ 74° F)	
Demold time	10 - 15 min.
Gel time	120 - 180 seconds

Performance characteristics	
Fiber wetting	Excellent
Sagging / Draining	Minimal
Fabricating Method	All room temperature methods

PREDL SYSTEMS
7520 Conrad Street
Burnaby, B.C. V5A 2H7
Phone : 604 415-9944
Fax : 604 415-9954

DRAWN BY:	DATE DRAWN:
-	5/3/2018

REV NO	DATE/DESCRIPTION
-	-
-	-
-	-
-	-
-	-
-	-
-	-
-	-
-	-
-	-
-	-
-	-
-	-

SPECIFIED FOR:
IWT

PROJECT DESCRIPTION:
HONOLULU HAWAII
WETWELLS

DRAWING DESCRIPTION:
48" DIA PVC
WETWELL MANHOLE
& VALVE STATION

DWG NO:	REV NO:
2145812-3-48	0

SCALE:
AS NOTED

CLIENTS JOB NUMBER: